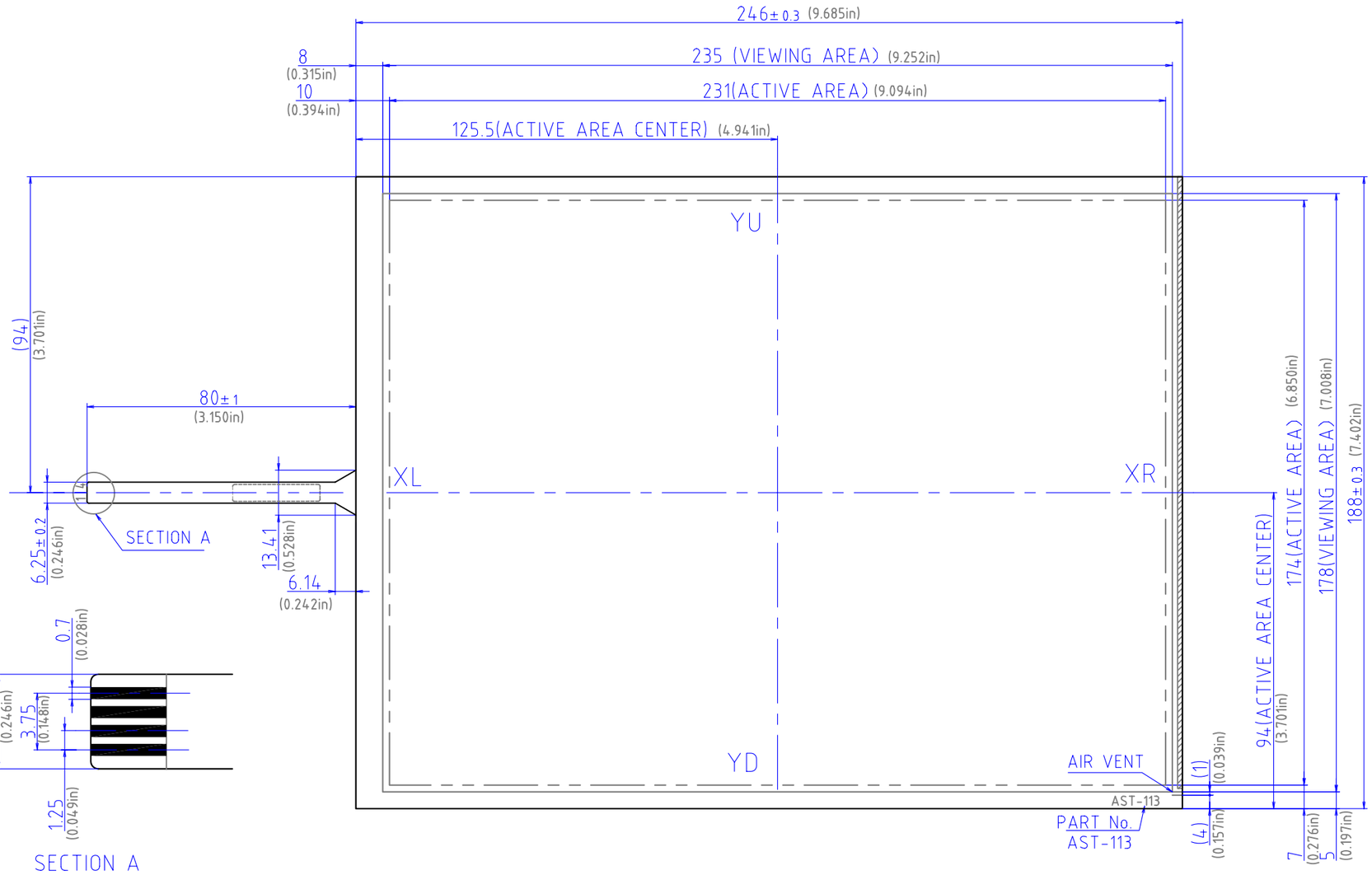

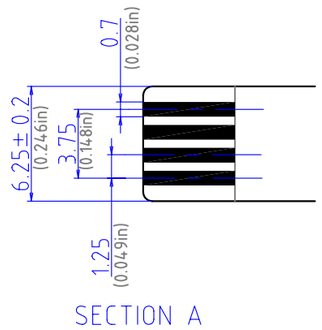

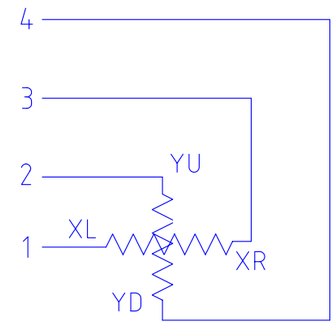

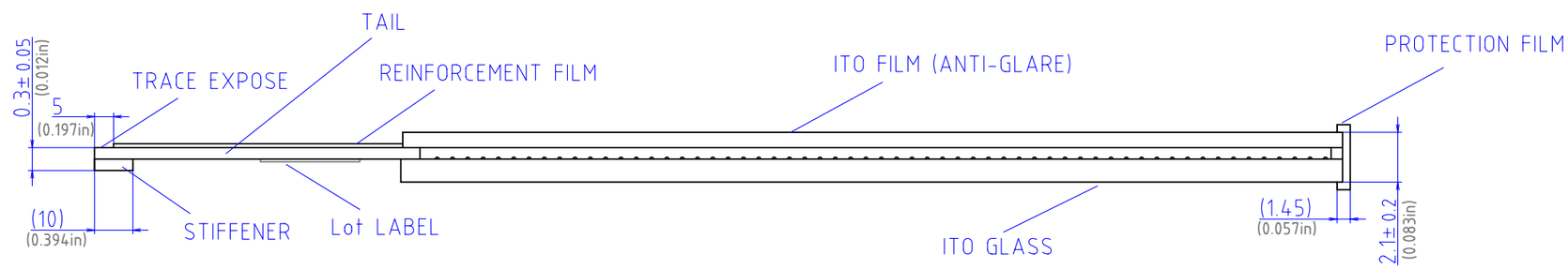

Tolerance± 0.5
Unit=mm

PART	DATE
AST-113	2003.03.15
TYPE	
STANDARD TOUCHSCREEN DIMENSIONAL DRAWING	DMC Co., Ltd.